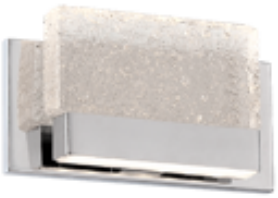

Project:

Location:

Fixture Type:

Catalog Number:

AVAILABLE FINISHES:

Glacier

WS-6509

FEATURES

- ACLED driverless technology
- Steel hardware, Piastra glass
- Up and down illumination

SPECIFICATIONS

Rated Life	54000 Hours
Standards	ETL, cETL,Damp Location Listed
Input	120 VAC,50/60Hz
Dimming	ELV
Color Temp	3000K
CRI	90
Construction	Steel construction with Piastra glass

REPLACEMENT PARTS

RPL-GLA-6509-01 - Glass

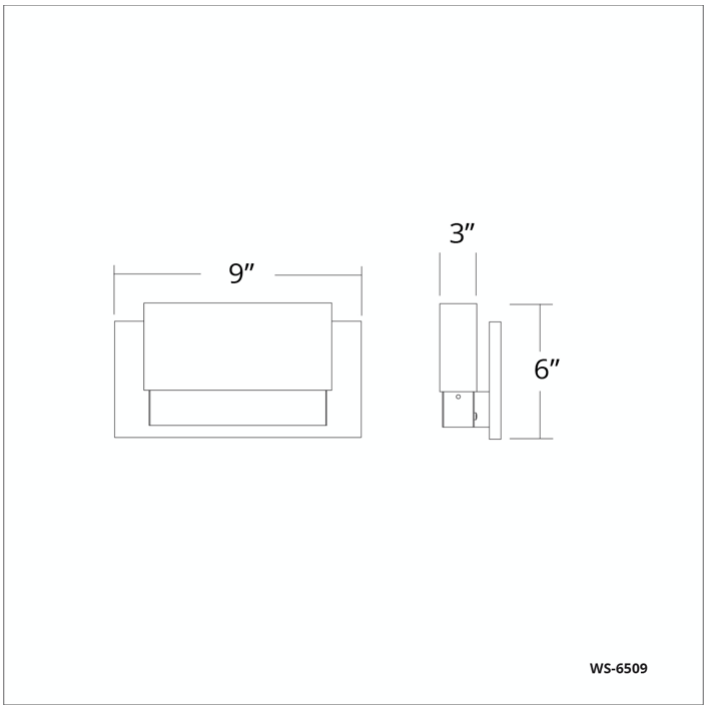

Model & Size	Color Temp	Finish	LED Watts	LED Lumens	Delivered Lumens
❍ WS-6509 9"	3000K 3000K	❍ BK Black ❍ CH Chrome	14W 14W	1230 1230	525 525

Example: **WS-6509-CH**

For custom requests please contact customs@modernforms.com