Project:

Location:

Fixture Type:

Catalog Number:

AVAILABLE FINISHES:

Chaos

WS-W64824

PRODUCT DESCRIPTION

Add this random work of art into your outdoor or indoor setting. Stack two or three fixtures together to make a singular design statement in large homes or commercial settings. Bars oflight are assembled in an amazing arrangement concealing integral LEDs. An extraordinary array of entangled forms of light.

FEATURES

- Driver concealed within the canopy
- Wet location rated for outdoor use
- Fixed sculptural form

SPECIFICATIONS

Rated Life	54000 Hours
Standards	ETL, cETL,Wet Location Listed,IP65,Title 24 JA8: 2019 Compliant
Input	120-277V,50/60Hz
Dimming	ELV, 0-10V, TRIAC
Mounting	Can be mounted on wall in all orientations
Color Temp	3000K
CRI	90
Construction	Extruded aluminum body with PC diffuser

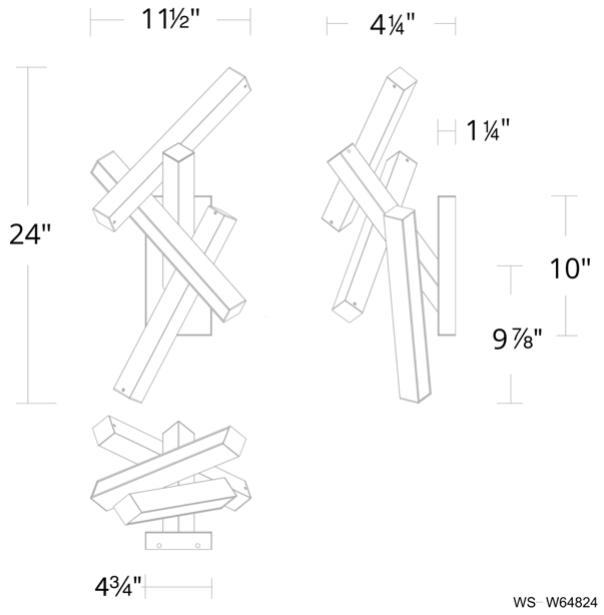

Model & Size	Color Temp	Finish	LED Watts	LED Lumens	Delivered Lumens
❍ WS-W64824 24"	3000K	❍ BK Black	22.7W	1228	768

Example: **WS-W64824-BK**

For custom requests please contact customs@modernforms.com