# GRACE 36 CHANDELIER

VISUAL COMFORT & CO.

## PRODUCT FEATURES

- Halo of light is gracefully created by two rings with integrated LED technology
- Available as a weathered oak ring with a black inner ring
- Ships with 12 feet of field-cuttable cable
- Dimmable with low-voltage electronic dimmer
- Protected by a 5-year warranty. please visit the “About Us” Page on techlighting.com for more for warranty details

Matte Black / Weathered Oak Wood

## LAMPING

Includes 120 volt 80.3 watt, 5768 total delivered lumens, 3000K LED module. 3500K only available in weathered oak. Dimmable with most LED compatible ELV and TRIAC dimmers. Ships with 12 feet of field-cuttable cable.

Matte Black / Weathered Oak Wood

Matte Black / Weathered Oak Wood 3/4

Aged Brass

## ORDERING INFORMATION

| 700GRC | LENGTH (A) | FINISH | LAMP |
|---|---|---|---|
| | 36 36" | R AGED BRASS | -LED930 INTEGRATED LED 90CRI 3000K 120V (T24) |
| | | BW MATTE BLACK/WEATHERED OAK WOOD | -LED935 INTEGRATED LED 90 CRI 3500K 120V |

700GRC _____ _____ _____

JOB NAME _____

NOTES _____

_____

© 2019 Tech Lighting, L.L.C. All rights reserved. The “Tech Lighting” graphic is a registered trademark of Tech Lighting, L.L.C.
Tech Lighting reserves the right to change specifications for product improvements without notification.

7400 Linder Avenue, Skokie, IL 60077
T 847.410.4400 | F 847.410.4500 | techlighting.com

# GRACE 36 CHANDELIER

VISUAL COMFORT & CO.

## SPECIFICATIONS

| | |
|---|---|
| PRIMARY MATERIAL | Aluminum |
| SHADE MATERIAL | Aluminum |
| NET WEIGHT | 23 lbs |
| HEIGHT | 3.8in |
| WIDTH | 35.8in |
| LENGTH | 35.8in |
| UP LIGHT / DOWN LIGHT / BOTH? | |
| WET LISTED | |
| DAMP LISTED | |
| DRY LISTED | |
| MIN. HANGING HEIGHT | 11.8in |
| MAX HANGING HEIGHT | 149.8in |
| TOTAL CORD LENGTH | 144in |
| TOTAL STEM LENGTH | |
| STEM QTY | |
| SLOPED CEILING ADAPTABLE? | Yes 45° Max |
| GENERAL LISTING | ETL Listed |
| INCLUDES | |

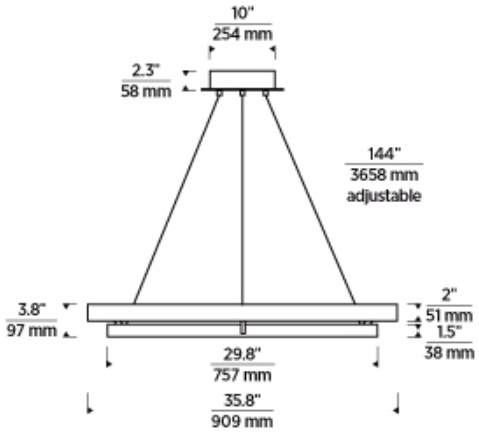


## LAMPING SPECIFICATIONS

| | LED LAMP | INTEGRATED LED | NON LED | NO LAMP |
|---|---|---|---|---|
| DELIVERED LUMENS | | 5768.0 | | |
| WATTS | | 80.3 | | |
| MAX WATTAGE PER BULB | | 80.3W | | |
| | | 120V ELV, TRIAC | | |
| CCT | | 3000K<br>3500K | | |
| CRI | | 90 CRI | | |
| LED LIFETIME | | | | |
| L70 | | >50000 | | |
| AVERAGE BULB HOURS | | | | |
| FIELD SERVICEABLE LED | | | | |
| LAMP BASE | | Integrated LED | | |
| LAMP SHAPE | | Integrated LED | | |
| LAMP INCLUDED? | | True | | |
| WARRANTY** | | 5 Years | | |

* Dimming information available at www.techlighting.com/Downloads#dimming
** Visit techlighting.com for specific warranty limitations and details.

## T20 / T24 / JA8 INFORMATION

| | Integrated LED | Replacement LED Lamp | No Lamp * |
|---|---|---|---|
| This product can be used to comply with California Building Energy Efficiency Standards 2016 Title 24 Part 6 / JA8. | Yes | | |
| This product can be used to comply with California Appliance Efficiency Standards 2016 Title 20 and may be shipped to and sold in California. | N/A | | |

* If a light fixture or component does not include a lamp or light source, it is the responsibility of the customer to select a lamp that meets the T24 and T20 requirements.

© 2019 Tech Lighting, L.L.C. All rights reserved. The "Tech Lighting" graphic is a registered trademark of Tech Lighting, L.L.C.
Tech Lighting reserves the right to change specifications for product improvements without notification.

7400 Linder Avenue, Skokie, IL 60077
T 847.410.4400 | F 847.410.4500 | techlighting.com