WYTHE X-LARGE CHANDELIER

VISUAL COMFORT & CO.

PRODUCT FEATURES

- Natural Brass Finish with Cast Glass
- Industrial detailing of extrusion and glass holders
- Great feature piece to anchor a large dining room, foyer or living space
- Includes (12) 6" and (16) 12" rigid stems in coordinating finish.
- Fully dimmable integrated LED lamp
- Protected by a 5-year warranty. Please visit the "About Us" Page on techlighting.com for more for warranty details

Plated Brass (Lit)

LAMPING

Includes 61.3 watts, 5215 total delivered lumens, 2700K LED modules. Dimmable with most LED compatible ELV, Triac and 0-10V dimmers. Ships with (16) 12" and (8) 6" rigid stems in coordinating finish. 120V-277V.

Plated Brass (Lit) | Plated Brass (Unlit) | Plated Brass Alt (Lit) | Plated Brass Alt (Unlit)

To view all available finish options, please visit techlighting.com

ORDERING INFORMATION

700WYT	SHAPE OR SIZE	FINISH	LAMP
	12 LIGHT 12	BR PLATED BRASS PZ PLATED DARK BRONZE	-LED927 INTEGRATED LED 90 CRI 2700K 120V-277V UNV

700WYT _____ _____ _____

JOB NAME _____

NOTES _____

© 2019 Tech Lighting, L.L.C. All rights reserved. The "Tech Lighting" graphic is a registered trademark of Tech Lighting, L.L.C.
Tech Lighting reserves the right to change specifications for product improvements without notification.

7400 Linder Avenue, Skokie, IL 60077
T 847.410.4400 | F 847.410.4500 | techlighting.com

WYTHE X-LARGE CHANDELIER

VISUAL COMFORT & CO.

SPECIFICATIONS

PRIMARY MATERIAL	Aluminum
SHADE MATERIAL	Glass
NET WEIGHT	147 lbs
HEIGHT	14.8in
WIDTH	47.2in
LENGTH	47.2in
UP LIGHT / DOWN LIGHT / BOTH?	
WET LISTED	
DAMP LISTED	
DRY LISTED	
MIN. HANGING HEIGHT	24.3in
MAX HANGING HEIGHT	78.3in
TOTAL CORD LENGTH	
TOTAL STEM LENGTH	Up to 240in
STEM QTY	24
SLOPED CEILING ADAPTABLE?	No
GENERAL LISTING	ETL Listed
INCLUDES	

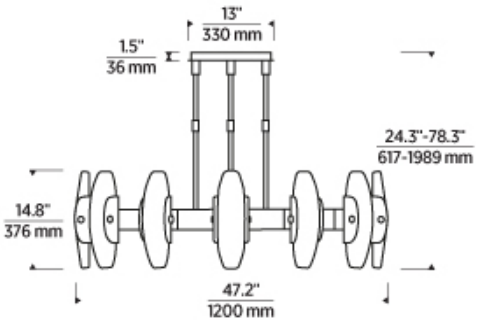

LAMPING SPECIFICATIONS

	LED LAMP	INTEGRATED LED	NON LED	NO LAMP
DELIVERED LUMENS		5215		
WATTS		61.3		
MAX WATTAGE PER BULB		61.3W		
		Universal 120V-277V 0-10, ELV, TRIAC		
CCT		2700K		
CRI		90 CRI		
LED LIFETIME				
L70		>50000		
AVERAGE BULB HOURS				
FIELD SERVICEABLE LED				
LAMP BASE		Integrated LED		
LAMP SHAPE		Integrated LED		
LAMP INCLUDED?		True		
WARRANTY**		5 Years		

* Dimming information available at www.techlighting.com/Downloads#dimming
** Visit techlighting.com for specific warranty limitations and details.

T20 / T24 / JA8 INFORMATION

	Integrated LED	Replacement LED Lamp	No Lamp *
This product can be used to comply with California Building Energy Efficiency Standards 2016 Title 24 Part 6 / JA8.	Yes		
This product can be used to comply with California Appliance Efficiency Standards 2016 Title 20 and may be shipped to and sold in California.	N/A		

* If a light fixture or component does not include a lamp or light source, it is the responsibility of the customer to select a lamp that meets the T24 and T20 requirements.

© 2019 Tech Lighting, L.L.C. All rights reserved. The "Tech Lighting" graphic is a registered trademark of Tech Lighting, L.L.C.
Tech Lighting reserves the right to change specifications for product improvements without notification.

7400 Linder Avenue, Skokie, IL 60077
T 847.410.4400 | F 847.410.4500 | techlighting.com