WAC LIGHTING

Fixture Type:

Catalog Number:

Project:

Location:

Layne

Wall Sconce

Model & Size	Color Temp & CRI	Finish	Watt	LED Lumens	Delivered Lumens
❍ WS-81208 8"	❍ 2700K 90	❍ BK Black	11W	621	228
	❍ 3000K 90	❍ BN Brushed Nickel	11W	648	238
	❍ 3500K 90		11W	625	228

Example: **WS-81208-35-BN**

For custom requests please contact customs@waclighting.com

FEATURES

- Up and downlight illumination
- Built in color temperature adjustability. Switch from 2700K/3000K/3500K
- ACLED driverless technology
- 5 Year warranty

SPECIFICATIONS

Color Temp:	2700K,3000K,3500K
Input:	120 VAC,50/60Hz
CRI:	90
Dimming:	ELV: 100-10% ,TRIAC: 100-10%
Rated Life:	54000 Hours
Mounting:	Can be mounted on wall in all orientations
Standards:	ETL, cETL,Title 24 JA8-2019 Compliant
	Damp Location Listed
Construction:	Aluminum body, glass diffuser

FINISHES:

Brushed Nickel

Black

LINE DRAWING:

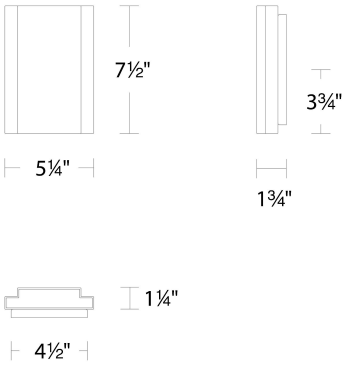

WS-81208

WAC Lighting retains the right to modify the design of our products at any time as part of the company's continuous improvement program. March 2022

Proudly assembled in America